Technical Note

Design Guide for Two DDR3-1066 UDIMM Systems

Introduction

DDR3 memory systems are very similar to DDR2 memory systems. One noteworthy difference is the fly-by architecture used in DDR3 JEDEC-standard modules. Depending on the intended market for the finished product, the memory buses will vary, and the memory system support requirements will range from point-to-point topologies to large, multiple registered DIMM topologies.

This design guide is intended to assist board designers in developing and implementing their products. The document focuses on memory topologies requiring two unbuffered DIMM devices operating at a data rate of 1066 Mb/s and two variations of the address and command bus. The first design variation discussed is a system with one DIMM per copy of the address and command bus using 1T clocking. The second design variation is a system with two DIMM devices on the address and command bus using 2T clocking.

The first section of this technical note outlines a set of board design rules, providing a starting point for a board design. The second section details the calculation process for determining the portion of the total timing budget allotted to the board interconnect. The intent is that board designers will use the first section to develop a set of general rules and then, through simulation, verify their designs in the intended environment.

Fly-By Architecture

Designers who build systems using unbuffered DIMM devices can implement the address and command bus using various configurations. For example, some controllers have two copies of the address and command bus, so the system can have one or two DIMM devices per copy, but no more than two DIMM devices per channel. Further, the address bus can be clocked using 1T or 2T clocking. With 1T clocking, a new command can be issued on every clock cycle; 2T timing will hold the address and command bus valid for two clock cycles. This reduces the efficiency of the bus to one command per two clocks, but it substantially increases the amount of setup and hold time available for the address and command bus. The data bus remains the same for the address bus variations.

DDR3 modules use faster clock speeds than earlier DDR technologies, making signal quality extremely important. For improved signal quality, the clock, control, command, and address buses have been routed in a fly-by topology, where each clock, control, command, and address pin on each DRAM is connected to a single trace and terminated. (Other topologies use a tree structure, where termination is off the module near the connector.) Inherent to fly-by topology, the timing skew between the clock and DQS signals can easily be accounted for using the write-leveling feature of DDR3.

Micron Technology, Inc., reserves the right to change products or specifications without notice.
©2009 Micron Technology, Inc. All rights reserved.

Products and specifications discussed herein are for evaluation and reference purposes only and are subject to change by Micron without notice. Products are only warranted by Micron to meet Micron's production data sheet specifications. All information discussed herein is provided on an "as is" basis, without warranties of any kind.

The address, command, and control signals are routed on the module with fly-by architecture. As illustrated throughout this technical note, the input signal lines are terminated on the module, and further termination is not required. For example, as shown in Figure 1 and Figure 2 on page 3, the V_{TT} terminating resistors are at the end of the fly-by channel.

Figure 1: DDR3-1066 Two-UDIMM Topology – 1T Address and Command Bus

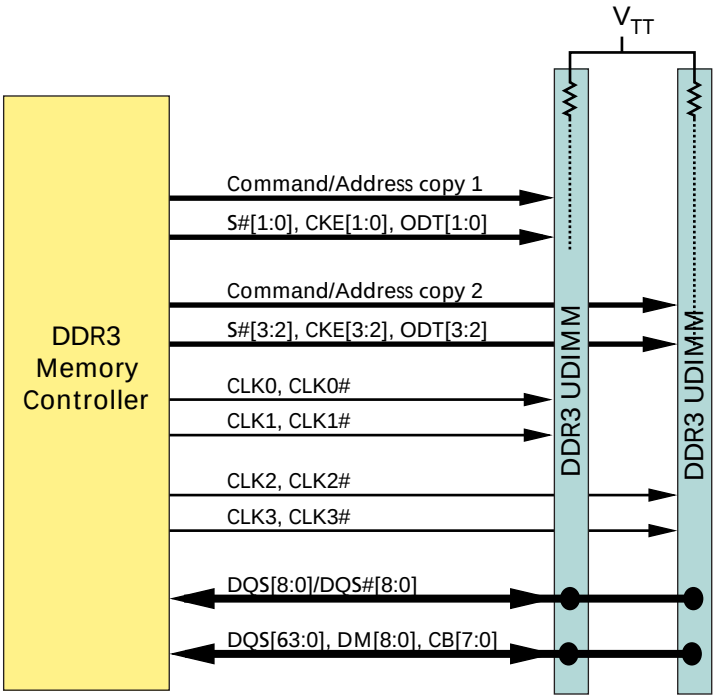

Micron Technology, Inc., reserves the right to change products or specifications without notice.
©2009 Micron Technology, Inc. All rights reserved.

Figure 2: DDR3-1066 Two-UDIMM Topology – 2T Address and Command Bus

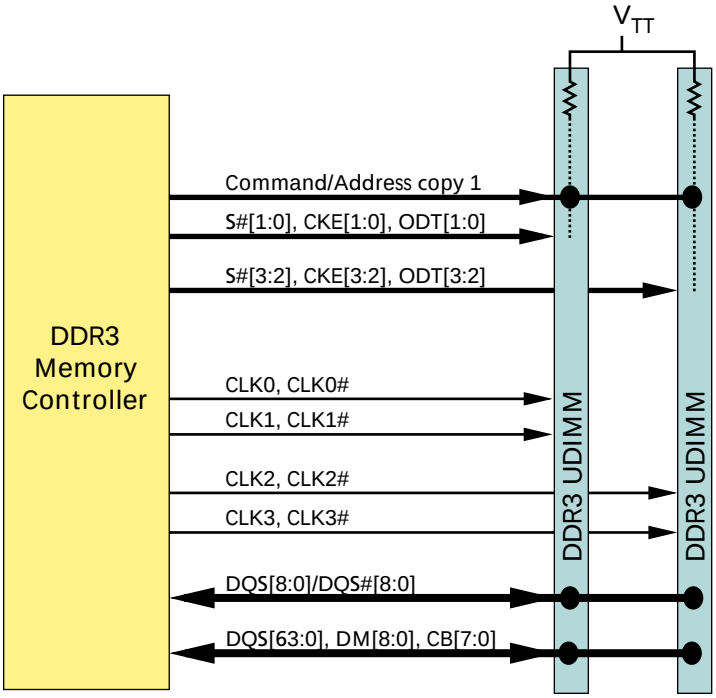

Note that a timing skew exists between the DRAM controller and the various DRAM devices on the DIMM**, and** the DRAM controller must account for the timing skews. DDR3 modules support write leveling, which is intended to help determine the timing skews. For an in-depth discussion of write-leveling features, refer to Micron's DDR3 data sheets that discuss write leveling.

DDR3 Signal Groups

The signals that compose a DDR3 memory bus can be divided into four unique groups, each with its own configuration and routing requirements.

- **Data group**: Data strobe DQS[8:0], data strobe complement DQS#[8:0], data mask DM[8:0], data DQ[63:0], and check bits CB[7:0] (x72)
- **Address and command group**: Bank addresses BA[2:0]; addresses A[15:0]; and command inputs, including RAS#, CAS#, and WE#
- **Control group**: Chip select S#[3:0], clock enable CKE[3:0], on-die termination ODT[3:0], and RESET#0
- **Clock group**: Differential clocks CK[3:0] and CK#[3:0]

Board Stackup

A two-DIMM DDR3 channel can be routed on a four-layer board. The layout should use controlled impedance traces of Z_O = 40Ω (±10%) characteristic impedance. An example board stackup is shown in Figure 3 on page 4. The trace impedance is based on a 5-mil-wide trace and 0.5oz copper (Cu) with a dielectric constant of 4.2 for the FR4 prepreg material. For this stackup, it is assumed that the 0.5oz Cu on the outer layers is plated for a total thickness of 2.1 mils. Other solutions exist to achieve a 40Ω characteristic impedance, so board designers should work with their PCB vendors to specify a stackup.

Micron Technology, Inc., reserves the right to change products or specifications without notice.
©2009 Micron Technology, Inc. All rights reserved.

Figure 3: Sample Board Stackup

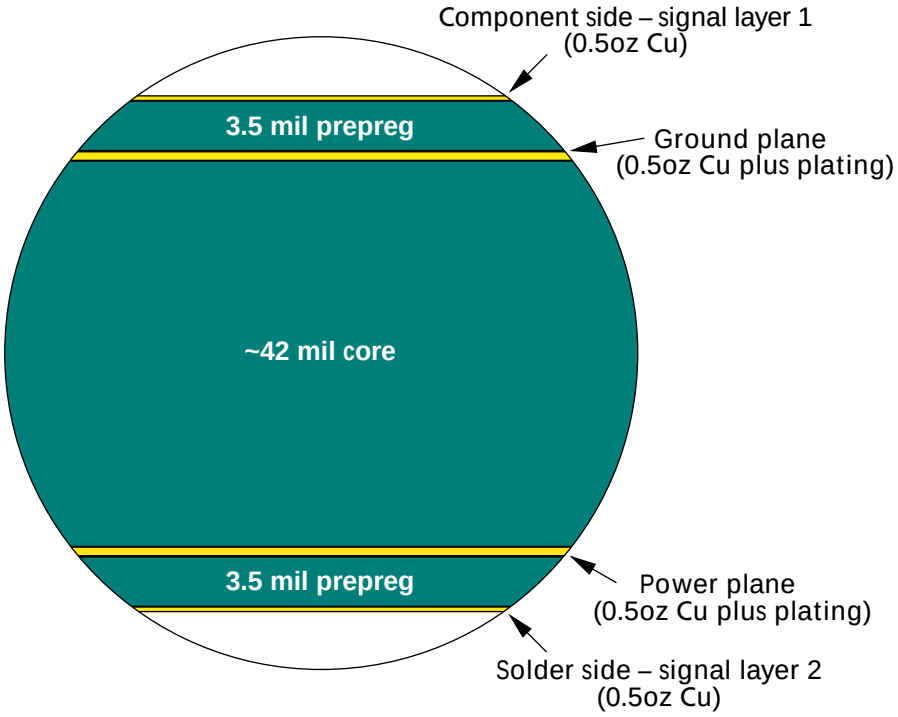

DDR3 Command and Address Voltage Margin and Slew Rate

The primary difference between DDR2 and DDR3 module command, address, and control signals is fly-by topology with impedance matching. Impedance matching is required for proper fly-by operation.

With a single DIMM placed at the end of the motherboard bus, the system is matched throughout. The driver impedance could be as much as **40**Ω, but is generally set a little lower; the motherboard is routed at **40**Ω; and the DIMM lead-in, which is about 4 inches, is routed at **40**Ω. DRAM-to-DRAM routing is **60**Ω, but when the additional capacitance of the DRAM devices is taken into account, this lead-in becomes an effective **40**Ω impedance. The termination resistor to V_{TT} is **39**Ω. This configuration provides fast slew rates and clean edge transitions due to the minimal number of reflections.

For configurations with 2 DIMMs on a channel, a mismatch occurs at the first DIMM. This mismatch will look like **20**Ω impedance and there will be a reflection toward the driver. If the driver impedance is **40**Ω, the reflection will terminate at the controller. When the signal sees the **20**Ω impedance, the amplitude drops by about 50%. After the first DIMM, the impedances are matched, and there will be little reflection from the termination.

Thus the primary effect of using a second DIMM is mostly amplitude reduction. There will also be a slight timing shift and some slew rate change. The slew rate change is due to the amplitude change, not a rise-time change. Rise time is based on a percentage of the total swing, whereas slew rate is based on the amplitude change.

The following figures provide examples of the slew rate change for a two-DIMM device versus a one-DIMM device. The slew rate changes are primarily associated with the amplitude change due to voltage division rather than the capacitive loading that domi-

Micron Technology, Inc., reserves the right to change products or specifications without notice.
©2009 Micron Technology, Inc. All rights reserved.

nated in DDR2. Figure 4 shows the waveform for the third DRAM on a single DIMM; Figure 5 compares the waveform for the third DRAM on the first DIMM of a two-DIMM device and the waveform for the third DRAM on the second DIMM of a two-DIMM device.

Figure 4: U3, SR, 1T at 1066

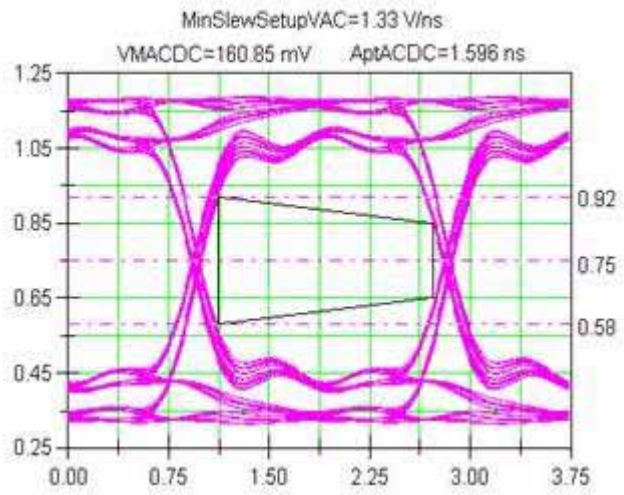

Figure 5: U3, DR, 1T at 1066

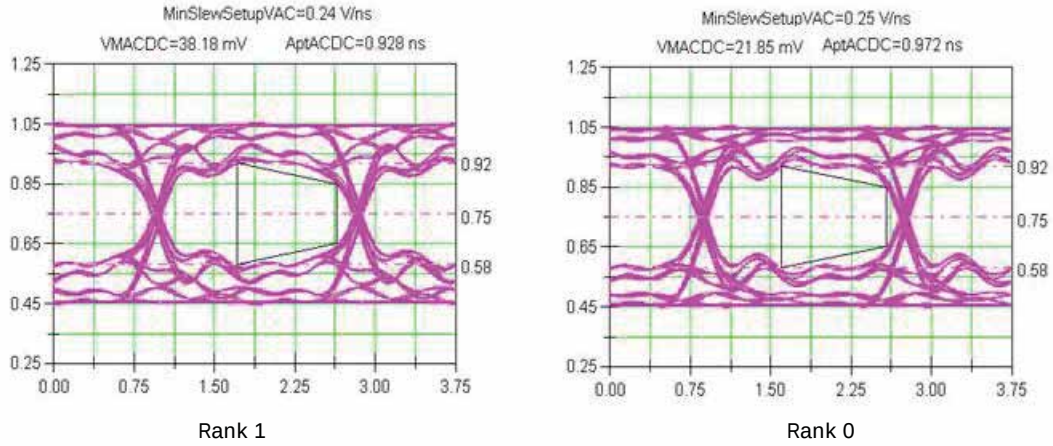

Address and Command Signals for 2T Clocking

On a DDR3 memory bus, the address and command signals are unidirectional signals driven by the memory controller. The address and command signals are captured at the DRAM using the memory clocks. For a system with two unbuffered DIMM devices per channel, signaling differs from that of a device with one unbuffered DIMM per channel. This difference is illustrated in Figure 4, compared with Figure 5 on page 5 and Figure 6 on page 6. The reduced slew rate makes it difficult, if not impossible, to use 1T timing and meet the setup and hold times at the DRAM.

Micron Technology, Inc., reserves the right to change products or specifications without notice.
©2009 Micron Technology, Inc. All rights reserved.

To address this issue, the controller can use 2T address timing—increasing the time available for the address command bus by one clock period, as shown in Figure 6. For DDR3-1066, using 2T on the address and command signals, the address and command bus runs at a maximum fundamental frequency of 266 MHz.

Note that S#, ODT, and CKE timings do not change between 1T and 2T addressing because they carry only half of the load carried by the other command signals.

Figure 6: U3, DR, R0, 2T at 1066

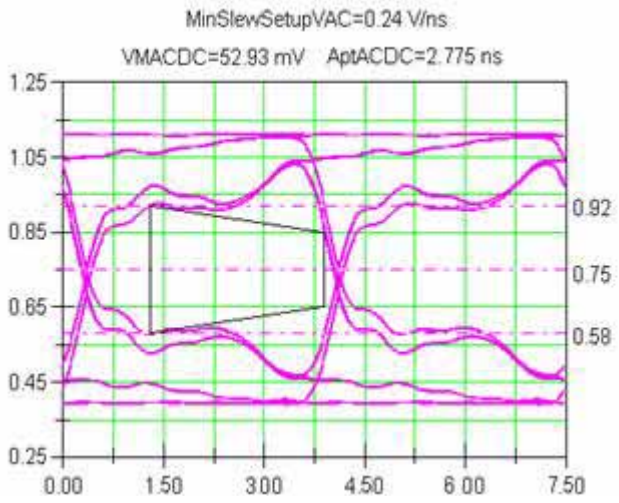

2T Address and Command Routing Rules

It is important to reference address and command lines to a solid power plane or to a ground plane, preferably to a solid V_{DD} power plane. V_{DD} is the 1.5V supply that also supplies power to the DRAM on the DIMM. On a four-layer board, the address and command lines are typically routed on the second signal layer and referenced to a solid power plane. The system address and command signals should be power referenced over the entire bus to provide a low-impedance current return path.

DDR3 unbuffered DIMM devices also reference the address and control signals to V_{DD} to maintain the power reference onto the module. The address and command signals should be routed from the controller to the first DIMM, away from the data group signals. Because address and command signals are captured at the DIMM using the clock signals, they must maintain a length relationship to the clock signals at the DIMM.

Unlike DDR2, where external V_{TT} termination resistors are required, DDR3 modules incorporate on-board V_{TT} termination resistors, as shown in Figure 7. This change was added to support fly-by architecture. All inputs, including the clock, have fly-by topologies; the data bus pins are directly connected to the DRAM controller. A possible design consideration would be to vary the topology shown in Figure 7 by bringing the address and control busses as far as the length B + C/2 and tie-off to each DIMM from the C/2 point.

Micron Technology, Inc., reserves the right to change products or specifications without notice.
©2009 Micron Technology, Inc. All rights reserved.

Figure 7: DDR3 Address and Command Signal Group 2T Routing Topology

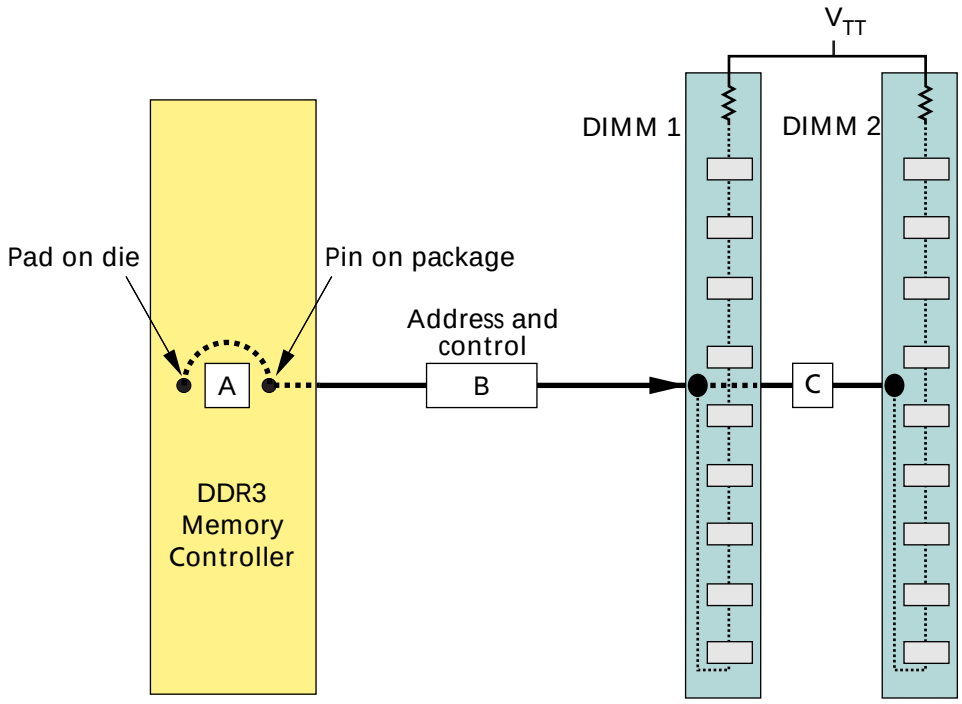

Table 1: Address and Command Group 2T Routing Rules

Length
A = Obtain from DRAM controller vendor ("A" is the length from the die pad to the ball on the ASIC package) B = 1.9 to 4.5 inches C = 0.425 inches **Total:** A + B + C = 2.5 to 5.0 inches
Length Matching
±20 mils of memory clock length at the DIMM[1]
Trace
Trace width = 5 mils: target 40Ω impedance Trace space = 12 to 15 mils, reducing to 11.5 mils between the pins of the DIMM Trace space from DIMM pins = 7 mils Trace space to other signal groups = 20 to 25 mils

Notes: 1. This value is controller-dependent.

Parallel/Pull-Up Resistor (V_{TTR}) Termination Resistor

The V_{TT} supply is still required on the motherboard. However, the external parallel termination resistors required for DDR2 are not required for DDR3 JEDEC-compliant modules; the V_{TT} terminating resistors are built onto the module.

Micron Technology, Inc., reserves the right to change products or specifications without notice.
©2009 Micron Technology, Inc. All rights reserved.

Address and Command Signals for 1T Clocking

On a DDR3 memory bus, the address and command signals are unidirectional signals driven by the memory controller. The address and command signals are captured at the DRAM using the memory clocks. For a system with two unbuffered DIMM devices per channel, the signaling differs from a device with one unbuffered DIMM per channel (see Figure 4 through Figure 6 starting on page 5). The reduced slew rate makes it difficult, if not impossible, to use 1T timing and meet the setup and hold times at the DRAM.

To address this issue, the controller can use 2T address timing—increasing the time available for the address command bus by one clock period, as shown in Figure 6.

To increase the timing margin, loading on the address and command bus must be reduced. Some controllers provide two copies of the address and command bus. One copy is connected to each DIMM, effectively reducing the total maximum load on the bus to one DIMM. With reduced loading, the timing and voltage margin is increased to a point that 1T address bus timing is generally achievable (see Figure 4 on page 5).

Address and command 1T signal-group routing topology is shown in the block diagram in Figure 8 on page 9. For DDR3-1066 using 1T on the address and command signals, the address and command bus runs at a maximum fundamental frequency of 533 MHz.

Adding an extra copy of address and command signals helps improve signaling, but load reduction alone may not be enough to comply with setup and hold times for 1T signals.

1T Address and Command Routing Rules

It is important to reference address and command lines to a solid power plane or to a ground plane.

On a four-layer board, the address and command lines are typically routed on the second signal layer and referenced to a solid power plane. The system address and command signals should be power referenced over the entire bus to provide a low-impedance current return path.

The address and command signals should be routed away from the data group signals, from the controller to the first DIMM. Because address and command signals are captured at the DIMM using the clock signals, they must maintain the length relationship to the clock signals at the DIMM.

Micron Technology, Inc., reserves the right to change products or specifications without notice.
©2009 Micron Technology, Inc. All rights reserved.

Figure 8: DDR3 Address and Command Signal Group 1T Routing Topology

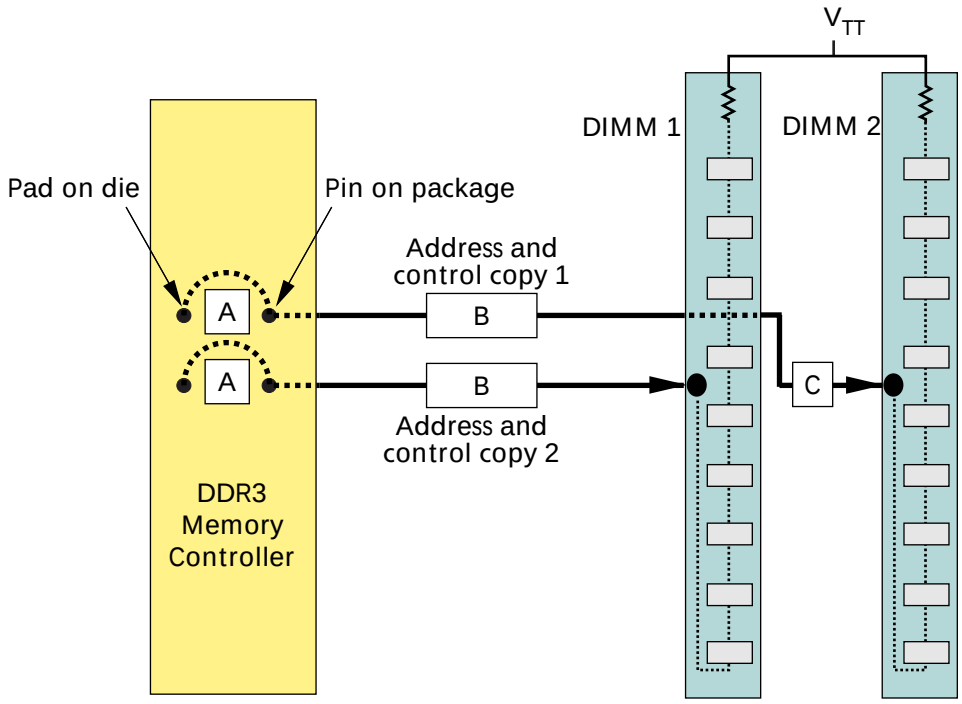

Table 2: Address and Command Group 1T Routing Rules

Length
A = Obtain from DRAM controller vendor ("A" is the length from the die pad to the ball on the ASIC package) B = 1.9 to 4.5 inches C = 0.425 inches **Total:** A + B + C = 2.5 to 5.0 inches
Length Matching
±20 mils of memory clock length at the DIMM[1]
Trace
Trace width = 5 mils: target 40Ω impedance Trace space = 12 to 15 mils, reducing to 11.5 mils between the pins of the DIMM Trace space from DIMM pins = 7 mils Trace space to other signal groups = 20 to 25 mils

Notes: 1. This value is controller-dependent.

Setup and Hold Derating

Setup and hold times require derating whenever the slew rate is faster than 1 V/ns. The derating factors can be obtained from the device data sheet. Slew rates slower than 1 V/ns generally do not require derating; however, derating can reclaim some time margin.

Micron Technology, Inc., reserves the right to change products or specifications without notice.
©2009 Micron Technology, Inc. All rights reserved.

Additionally, when developing a timing budget, derating the setup and hold times to V_{REF} points is necessary to ensure that all components are using the same timing reference points.

Parallel/Pull-Up Resistor (V_{TTR}) Termination Resistor

The external parallel termination resistors that were required for DDR2 are not required for DDR3 JEDEC-compliant modules; the V_{TT} terminating resistors are built onto the module.

Control Signals

The control signals in a DDR3 system are different from the address signals in several ways. First, the control signals need to use 1T timing. Second, each DIMM rank (also called rank) has its own copy of the control signals. Figure 9 on page 10 shows a block diagram of the topology used for the control signals.

The control signals in a DDR3 system differ from the address signals in several ways. First, the control signals use 1T timing. Second, each DIMM rank (also called rank) has its own copy of the control signals. Control signal-group routing topology is shown in the block diagram below.

Figure 9: DDR3 Control Signal Group Routing Topology

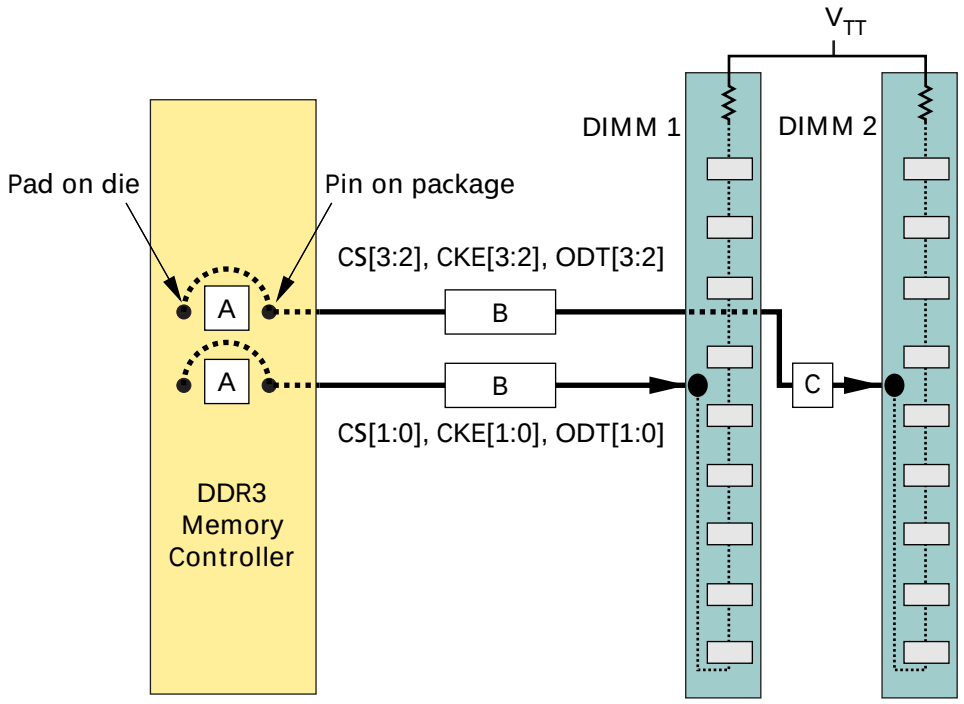

ODT

Like DDR2, DDR3 supports on-die termination (ODT) signals. For DDR3 modules, ODT provides more ranges to select from, and also supports dynamic ODT. For a detailed discussion of dynamic ODT, refer to Micron's DDR3 data sheets.

Micron Technology, Inc., reserves the right to change products or specifications without notice.
©2009 Micron Technology, Inc. All rights reserved.

In DDR3 devices, ODT signals are used to control the termination of the data group signals. DDR3 does not need the external serial and parallel termination resistors on the data group signals used in earlier DDR systems. The enhanced DDR3 ODT termination scheme terminates signals via internal termination resistors in the DRAM device and in the controller. ODT signals are used to turn termination on or off in the DRAM (ODT is enabled or disabled using the mode registers), depending on the type of bus transition and the system load.

ODT Simulations

Simulations were performed to define ODT settings and values. Table 3 on page 11 shows write simulations run with ODT values of 40Ω, 60Ω, and 120Ω for the active slot and 20Ω, 30Ω, and 40Ω for the standby slot. Table 4 on page 12 shows read simulations run with controller ODT values of 60Ω, 57Ω, 150Ω, and 300Ω; and ODT values at 20Ω, 30Ω, 40Ω, 60Ω, and 120Ω.

The ODT scheme shown in Table 5 on page 12 provides an alternative method for dual rank (DR) modules. Using dynamic ODT provides tighter ODT control. Simulations showed that up to 20ps of additional margin is possible using dynamic ODT.

No single ODT value delivered the best maximum aperture and voltage margin, with the lowest jitter. So the results were reviewed and the best overall value was selected. The ODT values provided in this technical note are only recommendations and provide a good starting point for analyzing a system.

For example, two similar designs might use different ODT values based on specific design needs; one might need greater voltage margin, the other more timing margin. If a DRAM controller supplier recommends an ODT scheme that differs from those presented here, designers should follow the supplier's recommendation for ODT use.

Table 3: DDR3 ODT Control for Write Simulations

Configuration				Slot 1		Slot 2	
Slot 1 (DIMM 1)	Slot 2 (DIMM 2)	Write To	DRAM Controller	Rank 1	Rank 2	Rank 1	Rank 2
Dual rank	Dual rank	Slot 1	ODT off	120Ω	ODT off	ODT off	30Ω
		Slot 2	ODT off	ODT off	30Ω	120Ω	ODT off
Dual rank	Single rank	Slot 1	ODT off	120Ω	ODT off	20Ω	n/a
		Slot 2	ODT off	ODT off	20Ω	120Ω[1]	n/a
Single rank	Dual rank	Slot 1	ODT off	120Ω[1]	n/a	ODT off	20Ω
		Slot 2	ODT off	20Ω	n/a	120Ω	ODT off
Single rank	Single rank	Slot 1	ODT off	120Ω[1]	n/a	30Ω	n/a
		Slot 2	ODT off	30Ω	n/a	120Ω[1]	n/a
Dual rank	Empty	Slot 1	ODT off	40Ω	ODT off	n/a	n/a
Empty	Dual rank	Slot 2	ODT off	n/a	n/a	40Ω	ODT off
Single rank	Empty	Slot 1	ODT off	40Ω	n/a	n/a	n/a
Empty	Single rank	Slot 2	ODT off	n/a	n/a	40Ω	n/a

Notes: 1. Made possible via dynamic ODT.

Micron Technology, Inc., reserves the right to change products or specifications without notice.
©2009 Micron Technology, Inc. All rights reserved.

Table 4: DDR3 ODT Control for Read Simulations

Configuration		Write To	DRAM Controller	Slot 1		Slot 2	
Slot 1 (DIMM 1)	Slot 2 (DIMM 2)			Rank 1	Rank 2	Rank 1	Rank 2
Dual rank	Dual rank	Slot 1	75Ω	ODT off	ODT off	ODT off	30Ω
		Slot 2	75Ω	ODT off	30Ω	ODT off	ODT off
Dual rank	Single rank	Slot 1	75Ω	ODT off	ODT off	20Ω	n/a
		Slot 2	75Ω	ODT off	20Ω	ODT off	n/a
Single rank	Dual rank	Slot 1	75Ω	ODT off	n/a	ODT off	20Ω
		Slot 2	75Ω	20Ω	n/a	ODT off	ODT off
Single rank	Single rank	Slot 1	75Ω	ODT off	n/a	30Ω	n/a
		Slot 2	75Ω	30Ω	n/a	ODT off	n/a
Dual rank	Empty	Slot 1	75Ω	ODT off	ODT off	n/a	n/a
Empty	Dual rank	Slot 2	75Ω	n/a	n/a	ODT off	ODT off
Single rank	Empty	Slot 1	75Ω	ODT off	n/a	n/a	n/a
Empty	Single rank	Slot 2	75Ω	n/a	n/a	ODT off	n/a

Table 5: Alternative DDR3 ODT Control for Dual Rank Write Simulations

Configuration		Write To		DRAM Controller	Slot 1		Slot 2	
Slot 1 (DIMM1)	Slot 2 (DIMM2)				Rank 1	Rank 2	Rank 1	Rank 2
Dual rank	Dual rank	Slot 1	Rank 1	ODT off	120Ω[1]	ODT off	30Ω	ODT off
			Rank 2	ODT off	ODT off	120Ω	30Ω	ODT off
		Slot 2	Rank 1	ODT off	30Ω	ODT off	120Ω[1]	ODT off
			Rank 2	ODT off	30Ω	ODT off	ODT off	120Ω

Notes: 1. Made possible via dynamic ODT.

Table 6: Control Group Routing Rules

Length
A = Obtain from DRAM controller vendor (“A” is the length from the die pad to the ball on the ASIC package) B = 1.9 to 4.5 inches C = 0.425 inches D = 0.2 to 0.55 inches **Total:** A + B + C = 2.5 to 6.0 inches
Length Matching
±20 mils of memory clock length at the DIMM[1]
Trace
Trace width = 5 mils: target 40Ω impedance Trace space = 12 to 15 mils, reducing to 11.5 mils between the pins of the DIMM Trace space from DIMM pins = 7 mils Trace space to other signal groups = 20 to 25 mils

Notes: 1. This value is controller-dependent.

Micron Technology, Inc., reserves the right to change products or specifications without notice.
©2009 Micron Technology, Inc. All rights reserved.

Control Signal Routing Rules

Similar to the address signals, the control signals must be referenced to a solid power plane or to a ground plane. On a four-layer board, the control signals are typically routed on the bottom signal layer and referenced to a solid power plane. The system control signals must be power referenced over the entire bus to provide a Low-Z current return path. Unlike address signals, control signals are routed point-to-point from the controller to the DIMM.

The control signals do not require any series or parallel resistance. The control signals must be routed with clearance from the data group signals, from the controller to the first DIMM. Because the control signals are captured at the DIMM using the clock signals, they must maintain the length relationship to the clock signals at the DIMM.

Parallel/Pull-up Resistor (V_{TTR}) Termination Resistor

The external parallel termination resistors that were required for DDR2 are no longer required with DDR3 JEDEC-compliant modules because the V_{TT} terminating resistors are built onto the module.

Data Signals

In a DDR3 system, the data is captured by the memory and the controller using the data strobe (DQS and DQS#) rather than the clock. The data strobe complement (DQS#) must be routed as a differential pair with the data strobe (DQS). To achieve the double data rate, data is captured on each crossing point of the DQS/DQS# pairs. Each eight bits of data has an associated data strobe (DQS and DQS#) and data mask (DM) bit. Because the data is captured off the strobe, the data bits associated with the strobe must be length-matched closely to their strobe bit. This grouping of data and data strobe is referred to as a byte lane. The length matching among byte lanes is not as tight as it is within the byte lane. Figure 10 shows the signals in a single-byte lane and the bus topology for the data signals; Table 7 shows the data and data strobe byte-lane groups.

Micron Technology, Inc., reserves the right to change products or specifications without notice.
©2009 Micron Technology, Inc. All rights reserved.

Figure 10: DDR3 Data Byte Lane Routing and Bus Topology

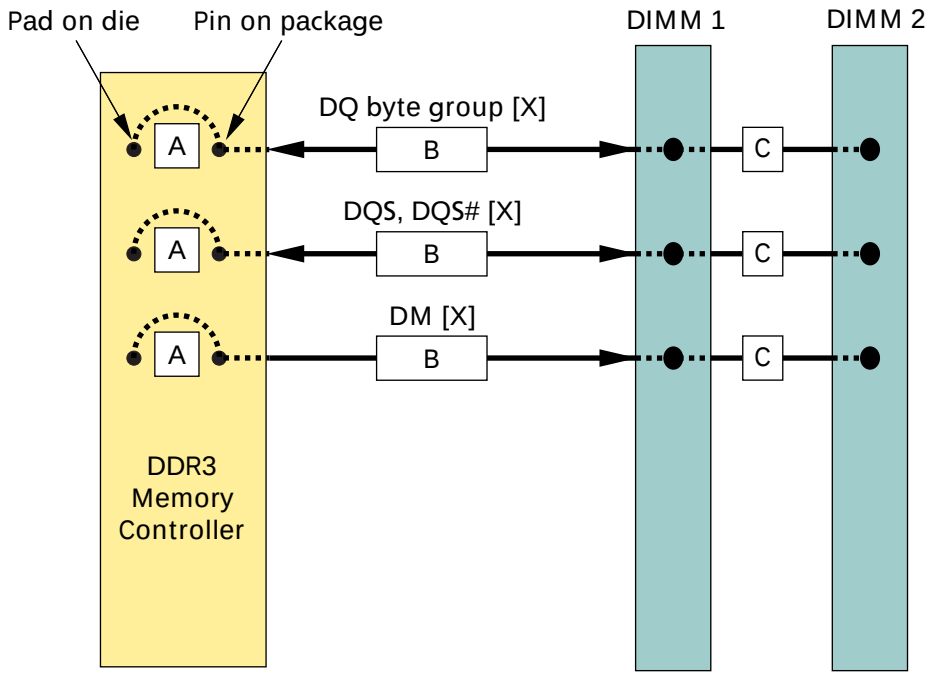

Table 7: Data and Data Strobe Byte Lane Groups

Data	Data Strobe	Data Strobe Complement	Data Mask
DQ[7:0]	DQS0	DQS#0	DM0
DQ[15:8]	DQS1	DQS#1	DM1
DQ[23:16]	DQS2	DQS#2	DM2
DQ[31:24]	DQS3	DQS#3	DM3
DQ[39:32]	DQS4	DQS#4	DM4
DQ[47:40]	DQS5	DQS#5	DM5
DQ[55:48]	DQS6	DQS#6	DM6
DQ[63:56]	DQS7	DQS#7	DM7
CB[7:0]	DQS8	DQS#8	DM8

Data Signal Routing Rules

It is important that the data lines be referenced to a solid ground plane. These high-speed data signals require a good ground return path to avoid signal quality degradation due to inductance in the signal return path. The system data signals should be ground-referenced from the memory controller to the DIMM connectors, and from DIMM connector to DIMM connector to provide a Low-Z current return path. This is accomplished by routing the data signals on the top layer for the entire length of the signal. The data signals should not have any vias. If this cannot be avoided, then the time delay associated with the via should be accounted for in the trace length.

Micron Technology, Inc., reserves the right to change products or specifications without notice.
©2009 Micron Technology, Inc. All rights reserved.

Table 8: Data Group Routing Rules

Length
A = Obtain from DRAM controller vendor ("A" is the length from the die pad to the ball on the ASIC package) B = 1.9 to 4.5 inches C = 0.425 inches **Total:** A + B + C = 2.5 to 5.0 inches
Length Matching in Data/Strobe Byte Lane
±20 mils data strobe, data strobe complement[1] 100 mils for each byte lane
Length Matching in Byte Lane to Byte Lane
Not required; de-skewing is required because of fly-by topology on the address command bus
Trace
Data Trace width = 7.9 mils: target 40Ω impedance Trace space = 11.8 mils minimum Trace space from DIMM pins = 7 mils Trace space to other signal groups = 12 mils **Differential Strobe** Trace width = 7.9 mils: target 40Ω impedance Trace space = 4 mils between pairs Trace space to other signals = 15.8 mils

Notes: 1. Differential signals have a faster propagation time than single-ended signals. If the data signals are routed slightly shorter than the data strobe, the data strobe signal will arrive at the DRAM in the center of its associated data signals. Because the propagation delay can vary with design parameters, simulating these signals is recommended.

Clock Signals

The memory clocks CK[4:0] and CK#[4:0] are used by the DRAM on a DDR3 bus to capture the address and command data. Unbuffered DIMM devices require two clock pairs per DIMM. Some DDR3 memory controllers drive all these clocks, and others require an external clock driver to generate these signals. This technical note assumes that the memory controller will drive the four clock pairs required for a two-DIMM unbuffered system. Clocks are not terminated to V_{TT} like the address signals of a DDR3 bus. The clocks are differential and must be routed as a differential pair. Each clock pair is differentially terminated on the DIMM. Figure 11 on page 16 illustrates the routing topology used for the clocks, but in this example, only one of the two clock pairs required per DIMM is shown.

Micron Technology, Inc., reserves the right to change products or specifications without notice.
©2009 Micron Technology, Inc. All rights reserved.

Figure 11: DDR3 Clock Signal Group Routing Topology

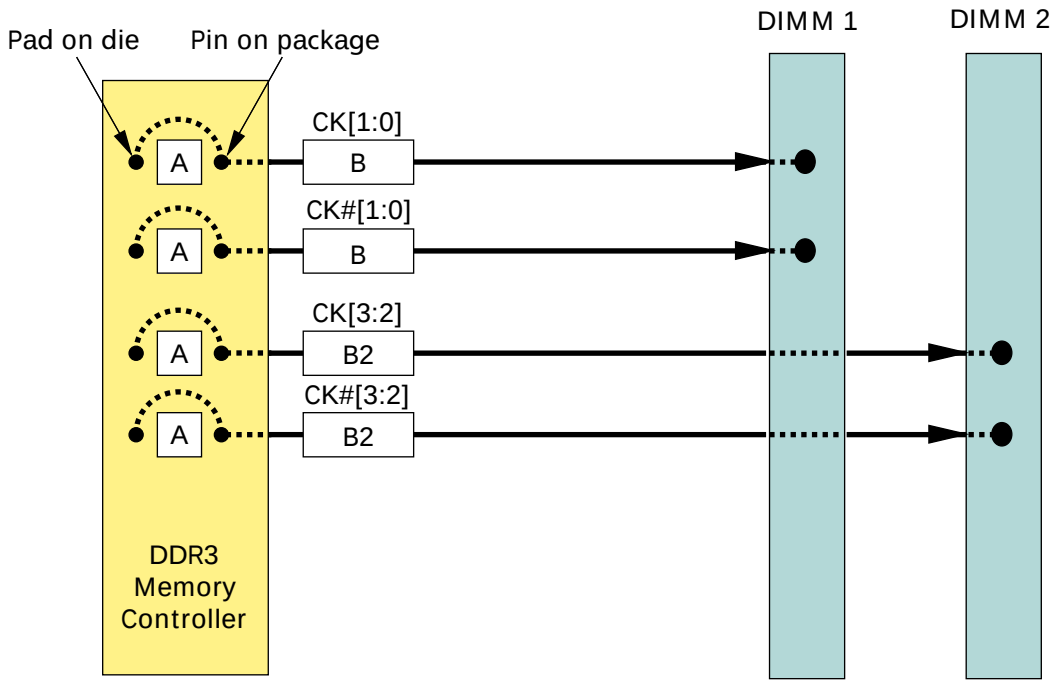

Clock Signal Routing Rules

The clocks are routed as a differential pair from the controller to the DIMM. The clocks are used to capture the address and control signals at the DRAM on the DIMM. As a result, the clocks must maintain a length relationship to the address and control signals at the DIMM to which they are connected. Most controllers have the ability to prelaunch the address and control signals; this feature is used to center the clock in the address valid eye. Prelaunching the address and control signals is required because the clocks are loaded lighter than the address signals, and as a result have less flight time from the controller to the DRAM on the DIMM. Differentially routed signals also have a shorter flight time than single-ended signals. This effect causes the clock signals to arrive at the DRAM even sooner than the address, command, and control signals; thus, the differential flight time is a little faster than the single-ended signals to the first DRAM based on the differential coupling. To compensate for the difference in propagation delay, it is recommended to route the clock signals slightly longer than the address, command, and control signals.

Micron Technology, Inc., reserves the right to change products or specifications without notice.
©2009 Micron Technology, Inc. All rights reserved.

Table 9: Clock Group Routing Rules

Length
A = Obtain from DRAM controller vendor ("A" is the length from the die pad to the ball on the ASIC package) B = 1.9 to 5.0 inches B2 = 2.325 to 5.425 inches
Length Matching
±4 mils for CK to CK# ±9.9 mils clock pair to clock pair at the DIMM
Trace
Trace width = 8 mils: target 40Ω trace impedance, 80Ω differential impedance Trace space = 5 mils Trace space to other signal groups = 20 mils

DDR3 Memory Power Supply Requirements

A DDR3 bus implementation requires three separate power supplies. The DRAM and the memory portion of the controller require a 1.5V supply. The 1.5V supply provides power for the DRAM core and I/O, and at a minimum, the I/O of the DRAM controller. The second power supply is V_{REF}, which is used as a reference voltage by the DRAM and the controller. The third power supply is V_{TT}, the bus termination supply. Table 10 on page 18 summarizes the tolerances for each of these supplies.

V_{REF} Voltage and Layout Recommendations

DDR3 supports a separate V_{REF} for address, command, and control pins (V_{REFCA}) and for the data bus (V_{REFDQ}). V_{REFCA} and V_{REFDQ} may come from the same power source, but they should be routed to and then decoupled separately at the DDR3 DIMM. Note that the term V_{REF} applies to both V_{REFCA} and V_{REFDQ}.

The memory reference voltage, V_{REF}, requires a voltage level of half V_{DD}/V_{DDQ} with the tolerance shown in Table 10. V_{REF} can be generated using a simple resistor divider with 1% or better accuracy. V_{REF} must track half V_{DD}/V_{DDQ} over voltage, noise, and temperature changes. Peak-to-peak AC noise on V_{REF} must not exceed ±2% $V_{REF(DC)}$. To ensure a solid DDR3 design, it is imperative that the V_{REF} noise, including crosstalk, is kept to a minimum.

When implementing V_{REF}, consider the following layout recommendations:

- Use a 30 mil trace between the decoupling cap and the destination.
- Maintain a 15 mil clearance from other nets.
- Simplify implementation by routing V_{REF} on the top signal trace layer.
- Isolate V_{REF} and/or shield with ground.
- Decouple using distributed 0.01µf and 0.1µf capacitors by the regulator, controller, and DIMM slots. Place one 0.01µf and one 0.1µf near the V_{REF} pin of each DIMM. Place one 0.1µf near the source of V_{REF}, one near the V_{REF} pin on the controller, and two between the controller and the first DIMM.

Micron Technology, Inc., reserves the right to change products or specifications without notice.
©2009 Micron Technology, Inc. All rights reserved.

V_{TT} Voltage and Layout Recommendations

The memory termination voltage (V_{TT}), requires current at a voltage level of 750 mV(DC). V_{TT} must be generated by a regulator that is able to sink and source reasonable amounts of current while still maintaining tight voltage regulation. Like V_{REF} implementation, it is also imperative that when implementing V_{TT}, the V_{TT} voltage is kept as stable as possible and that all noise, including crosstalk, is kept to a minimum. V_{TT} must also track variations in V_{DD}/V_{DDQ} over voltage, temperature, and noise ranges, and V_{TT} of the transmitting device must track V_{REF} of the receiving device.

When implementing V_{TT}, consider the following layout recommendations:

- Place the V_{TT} island on the component-side signal layer near the V_{TT} pins of the DIMM socket.
- Place the V_{TT} generator as close as possible to the island to minimize impedance (inductance).
- Place two or four 0.1µf decoupling capacitors at the V_{TT} lead to the DIMM on the V_{TT} island; this minimizes the noise on V_{TT}. Place other bulk decoupling (10–22µf) on the V_{TT} island.

Table 10: Tolerances of the Required Power Supply Voltages

Parameter	Symbol	Min	Typical	Max	Unit
Device supply voltage	V_{DD}	1.425	1.5	1.575	V
Memory reference voltage	V_{REF}	V_{DD} × 0.49	V_{DD} × 0.5	V_{DD} × 0.51	V
Memory termination voltage	V_{TT}	V_{REF} - 40mV	V_{REF}	V_{REF} + 40mV	V

Board Layout Design Guidelines

To help ensure good signaling, consider the following board design guidelines:

- Avoid crossing splits in the power plane
- Separate supplies and/or flip-chip packaging to help avoid having SSO on the controller, which collapses strobes/clocks
- Add low-pass V_{REF} filtering on the controller to improve noise margin
- Minimize V_{REF} noise:
  - Separate supplies or use flip-chip packaging
  - Use spacing techniques similar to those recommended for signals implementing V_{REF}
  - Use the widest trace practical between decoupling capacitors and DIMM V_{TT} pins
  - Maintain a single reference (either ground or V_{DD}) between the decoupling capacitor and the DRAM V_{REF} pin
- Minimize ISI by keeping impedances matched
- Minimize crosstalk by isolating sensitive bits, such as strobes, and avoiding return-path discontinuities

Micron Technology, Inc., reserves the right to change products or specifications without notice.
©2009 Micron Technology, Inc. All rights reserved.

DDR3 Timing Budgets

The first section of this technical note discussed DDR3 memory bus functions, the general relationship among the signals on the bus, and provided examples. If a design deviates from the examples provided, the routing rules for the design can change.

Because it is unlikely that every design will follow the examples exactly, it is important to simulate the design. One of the objectives of simulation is to determine whether the design will meet the signal timing requirements of the DIMM and DDR3 controller. To meet this objective, a timing budget must be generated. The following sections show how to use the data provided in the DDR3 DIMM and DDR3 controller data sheets to determine the amount of the total timing budget that can be allocated for board interconnect use.

Calculating DDR3 Data Write Budgets

Timing budgets for DDR3 WRITEs at 1066 MT/s and 800 MT/s are broken out in Table 11 on page 19. The portions of the budget consumed by the DRAM device and by the DDR3 controller are fixed and cannot be influenced by the board designer. The amount of the total budget remaining after subtracting the portion consumed by the DRAM and the controller is what remains for use by the board interconnect. This is the portion used to determine the bus routing rules. The different components of the board interconnect are outlined. The board designer can make trade-offs with trace spacing, length matching, and resistor tolerance to determine the most suitable interconnect solution for a given design.

Table 11: DDR3 Write Budget

Element	Skew Component	DDR3-800		DDR3-1066		Unit	Comments
		Setup	Hold	Setup	Hold		
Clock	Data/strobe chip PLL jitter	45	45	45	45	ps	
	DRAM ^{t}JITper	50	50	45	45	ps	Derate what the DRAM is tested for
	Clock skew	0	0	0	0	ps	
Transmitter	Controller skew	267	267	209	209	ps	Assume similar to DRAM and use DRAM's specifications
Interconnect	DQ crosstalk and ISI[1]	52	52	32	32	ps	1 victim (1010...), 4 aggressors (PRBS)
	DQS crosstalk and ISI[1]	23	23	23	23	ps	1 shielded victim (1010...), 2 aggressors (PRBS)
	V_{REF} reduction	10	10	10	10	ps	±30mV in DRAM skew, additional ±10 mV/(1 V/ns)
	R_{EFF} mismatch	0	0	0	0	ps	±6% accounted for by DRAM specification
	Path matching (board)	10	10	10	10	ps	Within byte lane: 165 ps/in; mismatch within DQS to DQ
	Path matching (module)	5	5	5	5	ps	Module routing skew (30% reduction with leveling)
	Input capacitance matching	5	5	5	5	ps	Strobe to data variation
	ODT skew (1%)	5	5	5	5	ps	Estimated
	Total interconnect	110	110	90	90	ps	
Receiver	DRAM skew	215	215	165	165	ps	^{t}DS, ^{t}DH from DRAM specification, derated for faster slew rates

Micron Technology, Inc., reserves the right to change products or specifications without notice.
©2009 Micron Technology, Inc. All rights reserved.

Table 11: DDR3 Write Budget (continued)

Element	Skew Component	DDR3-800		DDR3-1066		Unit	Comments
		Setup	Hold	Setup	Hold		
Total loss	Total skew	592	592	464	464	ps	Transmitter + receiver + interconnect skews
MAX eye	Time available	625	625	469	469	ps	Total time available
Budget (4L)	Timing margin	33	33	5	5	ps	4-layer (microstrip) 40Ω, 0.135mm trace to trace
4L to 6L	DQ crosstalk and ISI	9	9	9	9	ps	Reduction using microstrip versus stripline
	DQS crosstalk and ISI	19	19	19	19	ps	Reduction using microstrip versus stripline
Budget (6L)	Timing margin	61	61	33	33	ps	6-layer (stripline) 40Ω, 0.135mm trace to trace
DRAM specifications	^{t}DS	75	75	25	25	ps	Specification at 1 V/ns at $V_{IH(AC)}$
	^{t}DSVREF	211	211	161	161	ps	Specification derated to 1.5 V/ns, then adjusted to V_{REF}
	^{t}DH	150	150	100	100	ps	Specification at 1 V/ns at $V_{IH(AC)}$
	^{t}DHVREF	218	218	168	168	ps	Specification derated to 1.9 V/ns, then adjusted to V_{REF}

Notes: 1. Assumes uncoupled package model. When using a coupled package model, expect an increase of uncertainty from15ps to 30ps.

Calculating DRAM Write Budget Consumption

The amount of the write budget consumed by the DRAM is provided in the DDR3 data sheets. The data sheets also provide the data input hold time (^{t}DH) relative to strobe and the data input setup time (^{t}DS) relative to strobe. These values generally should not be entered directly into the timing budgets for setup and hold. It is important to derate the DRAM setup and hold times to account for any slew rate variations. The setup and hold times should also be converted from the trip-point specifications to V_{REF}-based values. Failure to do so could result in margin calculations that exceed what is actually available.

Calculating DDR3 Controller Write Budget Consumption

To calculate the amount of the setup timing budget consumed by the DDR3 controller on a DRAM WRITE, find the value for ^{t}DQSU MIN. This is the minimum amount of time all data will be valid before the data strobe transitions, as shown in Figure 12. ^{t}DQSU should take clock asymmetry into account. In an ideal situation, ^{t}DQSU would be equal to 1/4 × ^{t}CK. The difference between 1/4 × ^{t}CK and ^{t}DQSU is the amount of the write timing budget consumed by the controller for setup. From this, the following equation is derived:

$$\text{Controller setup data valid reduction} = 1/4 \times {}^{t}\text{CK} - {}^{t}\text{DQSU} \quad \text{(EQ 1)}$$

To calculate the hold time, use the same equation, ^{t}DQHD in place of ^{t}DQSU.

Micron Technology, Inc., reserves the right to change products or specifications without notice.
©2009 Micron Technology, Inc. All rights reserved.

Figure 12: Memory Write and Address/Command Timing

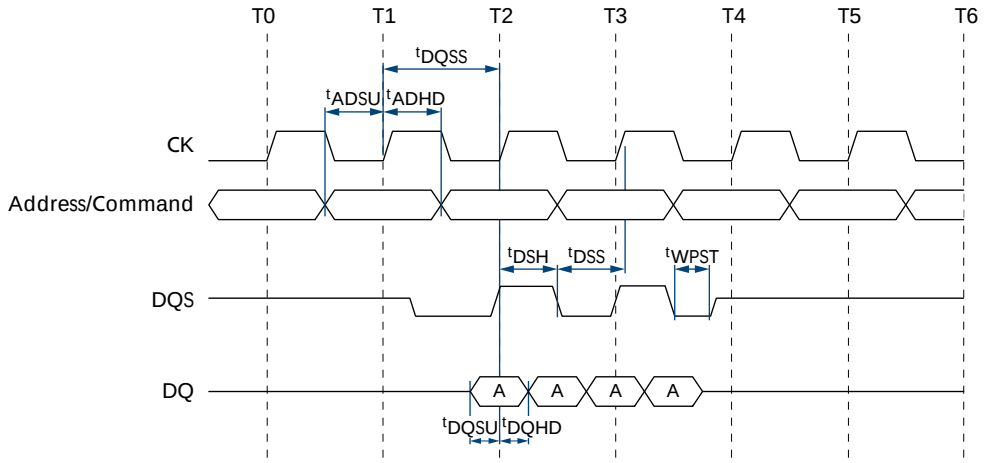

Calculating DDR3 Data Read Budgets

Timing budgets for DDR3 READs at 1066 MT/s and 800 MT/s are broken out in Table 12 on page 22. The portions of the budget consumed by the DRAM device and by the DDR3 controller are fixed and cannot be influenced by the board designer. The amount of the total budget remaining after subtracting the portion consumed by the DRAM and the controller is what remains for use by the board interconnect.

Micron Technology, Inc., reserves the right to change products or specifications without notice.
©2009 Micron Technology, Inc. All rights reserved.

Table 12: DDR3 Read Budget

Element	Skew Component	DDR3-800		DDR3-1066		Unit	Comments
		Setup	Hold	Setup	Hold		
Clock	Data/strobe chip PLL jitter	45	45	45	45	ps	Input clock jitter does not affect data capture
	DRAM ^{t}JITper	50	50	45	45	ps	DRAM output timing assumes no clock jitter; must derate ^{t}JITper and ^{t}JITduty below
	Clock skew	0	0	0	0	ps	
Transmitter	^{t}QHS (0.5 ^{t}CK - ^{t}QH)	300		225		ps	0.5 ^{t}CK to 0.47 ^{t}CK accounted for in ^{t}QHS measurement
	^{t}DQSQ	200		150		ps	
	^{t}JITduty (measured)	72		72		ps	^{t}JITduty measured, not specification; assume 80% of ^{t}JITper
	Duty cycle adjust	–38		–28		ps	Duty cycle improvement from WC - 48.5%, not 47%
	Memory controller skew	267	267	209	209	ps	^{t}CK/2 - (^{t}QH + ^{t}DQSQ + duty cycle adjust + ^{t}JITper)
Interconnect	DQ crosstalk and ISI[1]	22	22	32	32	ps	1 victim (1010...), 4 aggressors (PRBS)
	DQS crosstalk and ISI[1]	22	22	22	22	ps	1 shielded victim (1010...), 2 aggressors (PRBS)
	V_{REF} reduction (input eye)	10	10	10	10	ps	±30mV in DRAM skew, additional ±10 mV/(1 V/ns)
	R_{EFF}mismatch	0	0	0	0	ps	±6% accounted for by DRAM specification
	Path matching (board)	10	10	10	10	ps	Within byte lane: 165 ps/in, mismatch within DQS to DQ
	Path matching (module)	5	5	5	5	ps	Module routing skew (30% reduction with leveling)
	Capacitance matching	5	5	5	5	ps	Strobe to data variation
	ODT skew (1%)	5	5	5	5	ps	Estimated
	Total interconnect	79	79	89	89	ps	
Receiver	Memory controller skew	201	201	151	151	ps	^{t}DS, ^{t}DH from DRAM specification, derated for faster slew rates
Total loss	Total skew	548	548	450	450	ps	Transmitter + receiver + interconnect skews
MAX eye	Time available	625	625	469	469	ps	Total time available
Budget (4L)	Timing margin	77	77	19	19	ps	4-layer (microstrip) 40Ω, 0.135mm trace to trace
4L to 6L	DQ crosstalk and ISI	9	9	9	9	ps	Reduction using microstrip versus stripline
	DQS crosstalk and ISI	19	19	19	19	ps	Reduction using microstrip versus stripline
Budget (6L)	Timing margin	105	105	47	47	ps	6-layer (stripline) 40Ω, 0.135mm trace to trace

Notes: 1. Assumes uncoupled package model. When using a coupled package model, expect an increase of uncertainty from15ps to 30ps.

Micron Technology, Inc., reserves the right to change products or specifications without notice.
©2009 Micron Technology, Inc. All rights reserved.

Calculating DRAM Read Budget Consumption

Figure 13 illustrates how the values from the DRAM data sheet affects the total data valid window because the data is driven from the DRAM device. These values are used in the timing budget to determine the portion of the total data timing budget consumed by the DRAM device.

The total budget for the data is half the clock period. This time is halved again to determine the time allowed for setup and hold. Using the DRAM data sheet and filling in numbers for the timing parameters in Figure 13, the total data valid window at the DRAM can be calculated using the following equations:

$$DVW = {}^{t}HP - {}^{t}DQSQ - {}^{t}QHS \quad \text{(EQ 2)}$$

$${}^{t}CK/2 - DVW/2 = \text{DRAM data valid reduction} \quad \text{(EQ 3)}$$

The DRAM data valid reduction is used in the timing budget for setup and hold.

Figure 13: DRAM Read Data Valid

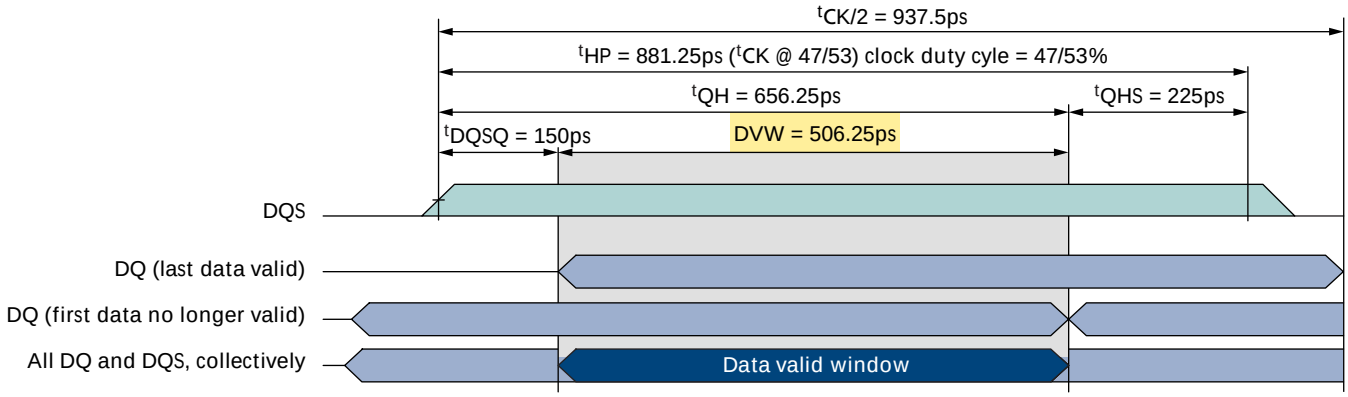

Calculating DDR3 Controller Read Budget Consumption

When read data is received at the controller from the DRAM, the strobe is edge-aligned with the data. The controller must delay the strobe and then use the delayed strobe to capture the read data. Each controller has a minimum value it can accept for a data valid window and a minimum setup and hold time that the data must maintain from the internally delayed strobe. Half the data valid window is the setup or hold time required by the controller, plus any controller-introduced signal skew and strobe-centering uncertainty. The timing diagram in Figure 14 on page 24 provides an example of the timing parameters required for calculating the data valid window. ${}^{t}DQSQ$ is the maximum delay from the last data signal to go valid after the strobe transitions. ${}^{t}QH$ is the minimum time all data must remain valid following a strobe transition. Use the following equation to obtain ${}^{t}DV$:

$${}^{t}DV = {}^{t}QH - {}^{t}DQSQ \quad \text{(EQ 4)}$$

Assuming that ${}^{t}DV$ is split evenly between setup and hold, the portion of the timing budget consumed by the controller for setup and hold is 1/2 ${}^{t}DV$. For the controller used in this example, an even split between setup and hold can be assumed because the controller determining the center of the data eye during the boot-up routine and the DLL maintain this relationship over temperature and voltage variations.

Micron Technology, Inc., reserves the right to change products or specifications without notice.
©2009 Micron Technology, Inc. All rights reserved.

Figure 14: Read Data Timing

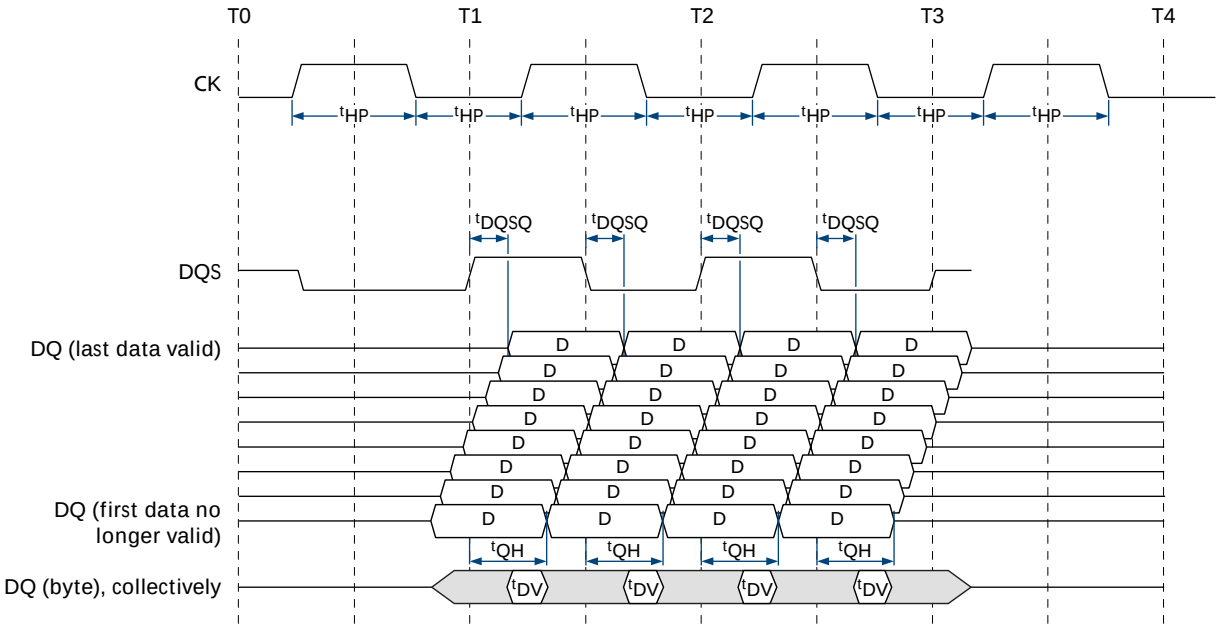

Micron Technology, Inc., reserves the right to change products or specifications without notice.
©2009 Micron Technology, Inc. All rights reserved.

Calculating 2T Address Timing Budgets

Timing budgets for the 2T address and command at a 1066 MHz clock rate are broken out in Table 13. Running the address and command at T2 with a 533 MHz clock results in an address frequency of 266 MHz. The portion of the budget consumed by the DRAM device and the DDR3 controller is fixed and cannot be influenced by the board designer. The amount of the total budget remaining after subtracting the portion consumed by the DRAM and the controller is what remains for use by the board interconnect.

Table 13: 2T Address Timing Budget[1]

Element	Skew Component	DDR3-800		DDR3-1066		Unit	Comments
		Setup	Hold	Setup	Hold		
Transmitter	Memory controller	300	300	300	300	ps	Chipset
Receiver	DRAM skew	640	640	560	560	ps	^{t}IS, ^{t}IH DRAM specification (0.3 V/ns to 1 V/ns)
Interconnect	Crosstalk: address	162	162	162	162	ps	1 victim (1010...), 4 aggressors (PRBS)
	ISI: address	165	165	165	165	ps	(PRBS)
	Crosstalk: clock	25	25	25	25	ps	
	V_{REF}: reduction	35	35	35	35	ps	±30mV included in DRAM skew; additional = (±20mV)/(0.3 V/ns)
	Path matching	25	25	25	25	ps	Within byte lane: 165 ps/in × 0.15in; MB routes account for the memory controller package skew
	DIMM configuration/loading mismatch	55	55	55	55	ps	DIMM 0/DIMM 1 = 5/18 versus 18/18 versus 5/0.
Total	Interconnect skew sum	467	467	467	467	ps	
Total losses	Transmitter + DRAM + interconnect	1407	1407			ps	200 MT/s per bit
				1327	1327		266 MT/s per bit
Total budget	3750 @ 266 MHz	2500	2500	1875	1875	ps	
Margin		1093	1093	549	549	ps	Must be greater than 0

Notes:
1. These are worst-case slow numbers (95°C, 1.7V, slow process).
2. The address crosstalk and ISI are approximately 80ps larger because the output driver did not have uniform pull-up and pull-down transistors; these values are determined at V_{REF}.

Calculating DRAM Address Budget Consumption

To determine the portion of the address budget consumed by the DRAM, use the value of ^{t}IS for setup and the value of ^{t}IH for hold. These are the setup and hold times required by the DRAM inputs. For systems with heavy loading on the address and command lines, the value in the data sheet must be derated, depending on the slew rate. See the DDR3 data sheet for derating information.

Calculating Controller Address Budget Consumption

The DRAM controller will provide a minimum setup and hold time for the address and command signals with respect to clock. This is the amount of the setup and hold budget consumed by the controller.

Micron Technology, Inc., reserves the right to change products or specifications without notice.
©2009 Micron Technology, Inc. All rights reserved.

Figure 15: Control and 2T Address/Command Timing

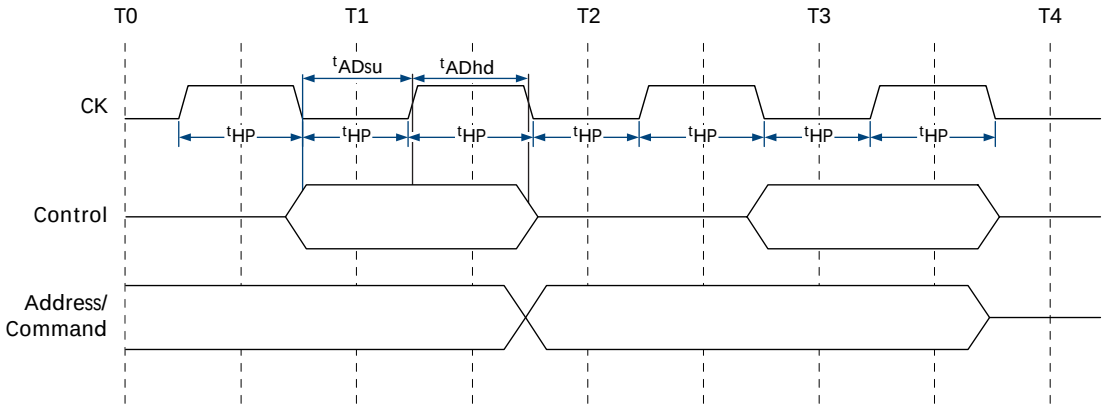

Calculating Control Signal Timing Budgets

The control signals always operate with 1T timing regardless of whether the address signals use 1T or 2T. When using 2T on the address signals, careful attention to the control signals is required. As shown in the timing diagram in Figure 15, the control signals will have half the time of the 2T address signals to meet setup and hold times. Because the loading on the control signals is much less than the loading on the address signals, the task of closing timing is not insurmountable.

Calculating the timing budgets for the control signals is performed in the same manner as calculating the timing budgets for address signals. The only difference is the amount of time per cycle. For a 533 MHz clock frequency, the control signal period is 1.875ns. Table 14 on page 27 provides a breakdown of the timing budget for the control signals.

When reviewing the information in the table, two items differ from the address timing budget. First, the portion of the budget consumed by the DRAM is reduced for the control signals. The reduced loading on the control signals results in increased edge rates. The edge rate is fast enough that derating the setup and hold time is generally not required, but very fast slew rates will require derating. Second, the portion of the timing budget consumed by variations in the DIMM configuration and loading conditions is greatly reduced. Because the loading on these signals is not affected by changes in total system loading in the same way as the address bus, each rank in the system has its own copy of the control signals. These two differences make it possible to close the control signal timing budget.

Micron Technology, Inc., reserves the right to change products or specifications without notice.
©2009 Micron Technology, Inc. All rights reserved.

Table 14: 1T Address Timing Budget[1]

Element	Skew Component	DDR3-800		DDR3-1066		Unit	Comments
		Setup	Hold	Setup	Hold		
Transmitter	Memory controller	300	300	300	300	ps	Chipset
Receiver	DRAM skew	375	375	300	300	ps	^{t}IS, ^{t}IH DRAM specification (1 V/ns) at V_{REF}
Interconnect	Crosstalk: address	109	109	109	109	ps	1 victim (1010...), 4 aggressors (PRBS)
	ISI: address	121	121	121	121	ps	(PRBS)
	Crosstalk: clock	25	25	25	25	ps	
	V_{REF}: reduction	10	10	10	10	ps	±30mV included in DRAM skew; additional = (±20mV)/(0.3 V/ns)
	Path matching	25	25	25	25	ps	Within byte lane: 165 ps/in × 0.15in; MB routes account for the memory controller package skew
	DIMM configuration/loading mismatch	55	55	55	55	ps	DIMM 0/DIMM 1 = 5/18 versus 18/18 versus 5/0
Total	Interconnect skew sum	345	345	345	345	ps	
Total losses	Transmitter + DRAM + interconnect	1020	1020	945	945	ps	533 MT/s per bit
Total budget	1875 @ 533 MHz	1250	1250	937	937	ps	
Margin		230	230	–7	–7	ps	Must be greater than 0

Notes: 1. These are worst-case slow numbers (95°C, 1.7V, slow process).

Considering the timing of all the signal groups in a system, it is notable that the control signals' valid eye falls within the 2T address valid eye. Figure 16 illustrates the timing relationships between control, address, and command timings. Address signals have a longer transition time than the control signals because of their slower slew rates. This relationship will hold true as long as the address signals and the control signals are held to the same setup and hold timing rules. As long as this relationship holds true, a closed 1T control timing budget will result in a closed 2T address budget. To retain this relationship, the system designer must subject all control, address, and command signals to the same length-matching rules.

When designing the relationships between the clock and the control, address, and command signals, the clock must be centered with respect to the 1T signals. This is accomplished with controller prelaunch and board routing. In the 1T budget example, the timing budget actually shows negative. This means that the design needs a controller with better timing, improved board design, or both.

Micron Technology, Inc., reserves the right to change products or specifications without notice.
©2009 Micron Technology, Inc. All rights reserved.

Figure 16: Control, Address, and Command Timing Relationship

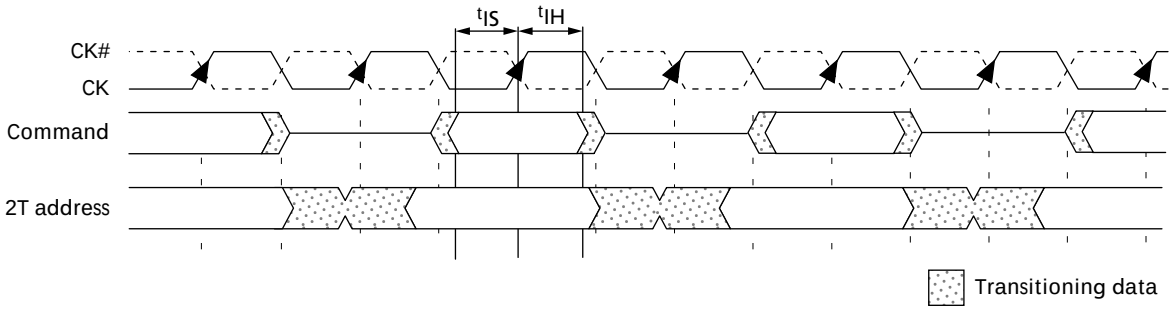

Clock to Data Strobe Relationship

The DDR3 DRAM and the DDR3 controller must move the data from the data strobe clocking domain into the DDR3 clock domain when the data is latched internally. To meet this requirement, the data strobe must maintain a relationship to the DDR3 clock. For DDR3 DRAM, this relationship is specified by ^{t}DQSS. This timing parameter specifies that after a WRITE command, the data strobe must transition 0.75 to 1.25 × ^{t}CK. Figure 12 on page 21 shows that the DDR3 controller also specifies a ^{t}DQSS timing parameter. This is the time elapsed after the WRITE command, after which the data strobe will transition. For the controller in this example, ^{t}DQSS = ±0.06 × ^{t}CK. The following equation is used to calculate the amount of clock-to-data-strobe skew that is left for consumption by the board interconnect:

$$\text{Interconnect budget} = \text{DRAM } ^{t}\text{DQSS} - \text{controller } ^{t}\text{DQSS} \quad \text{(EQ 5)}$$

Using this equation, it is apparent that this is not a strict timing requirement for a DDR3 channel. If the clocks are routed so that they are between the shortest and longest strobe lengths, the designer gains some leeway in the data strobe-to-data strobe byte-lane routing restrictions.

Conclusion

This technical note provides designers with a basic understanding of DDR3 module memory topology and timing budgets. It is an excellent starting point for developing a quality DDR3 motherboard using DDR3-1066 UDIMM systems. These guidelines and recommendations can also be applied to DDR3 SODIMM designs based on the similarity between the two memory topologies. It is important that designers understand that this information is intended only as a guide and that it is imperative to simulate all designs to verify their implementation.

8000 S. Federal Way, P.O. Box 6, Boise, ID 83707-0006, Tel: 208-368-3900
www.micron.com/productsupport Customer Comment Line: 800-932-4992
Micron and the Micron logo are trademarks of Micron Technology, Inc.
All other trademarks are the property of their respective owners.

Micron Technology, Inc., reserves the right to change products or specifications without notice.
©2009 Micron Technology, Inc. All rights reserved.

Revision History

Rev. B **1/11**

- Updated formats, added values, and revised text for clarity.

Rev. A **5/09**

- Initial release.

8000 S. Federal Way, P.O. Box 6, Boise, ID 83707-0006, Tel: 208-368-3900
www.micron.com/productsupport Customer Comment Line: 800-932-4992
Micron and the Micron logo are trademarks of Micron Technology, Inc.
All other trademarks are the property of their respective owners.

Micron Technology, Inc., reserves the right to change products or specifications without notice.
©2009 Micron Technology, Inc. All rights reserved.